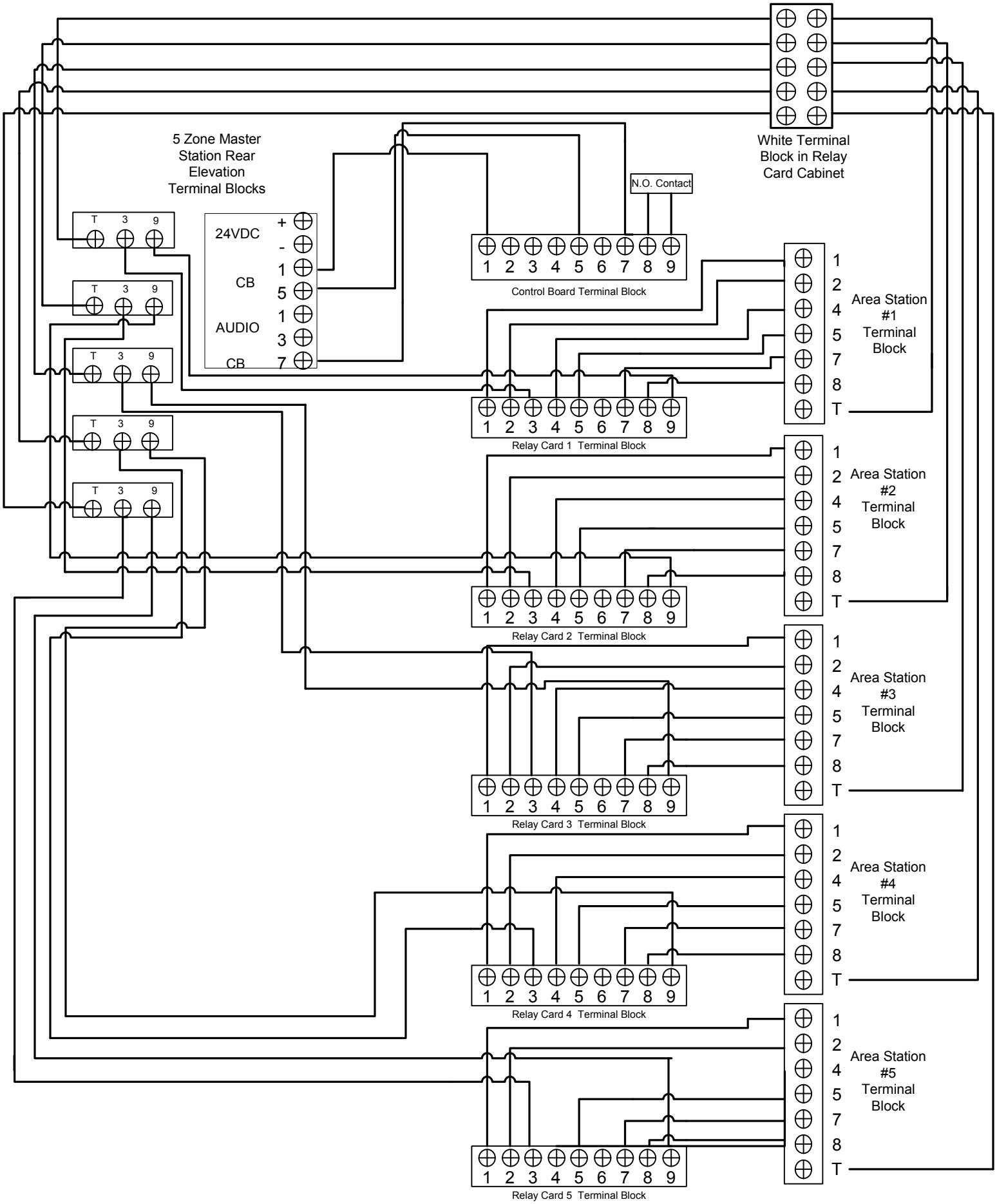ADA-100 Relay Card Cabinet Diagram